Sep.1.2024 Copyright 2024 HIROSE ELECTRIC CO., LTD. All Rights Reserved.
In case of consideration for using Automotive equipment / device which demand high reliability, kindly contact our sales window correspondents.

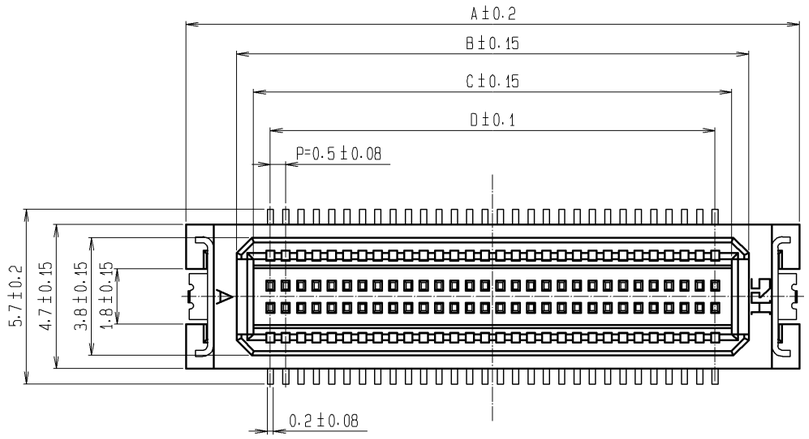

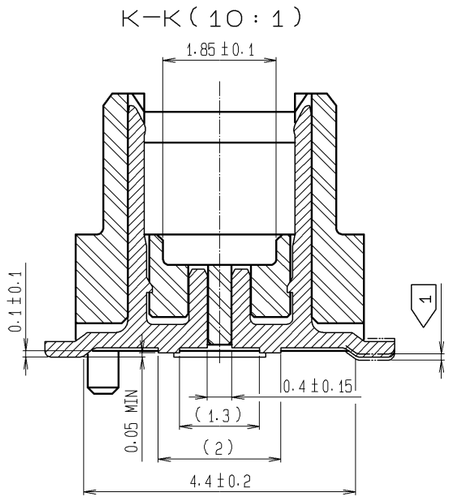

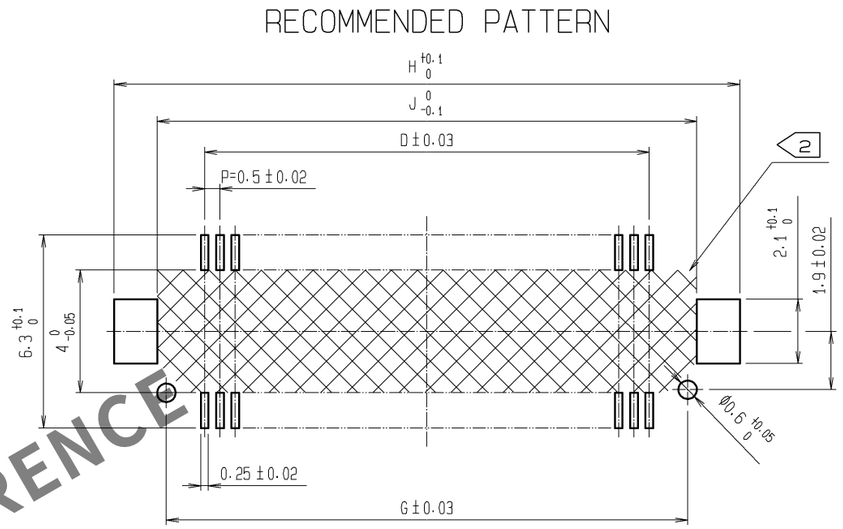

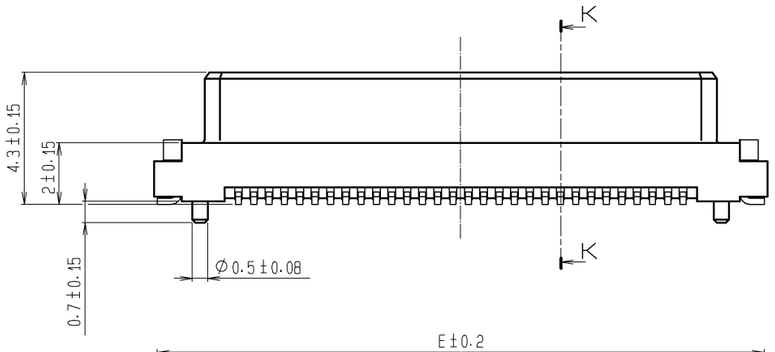

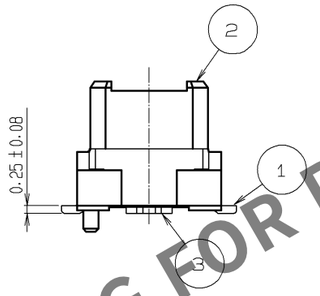

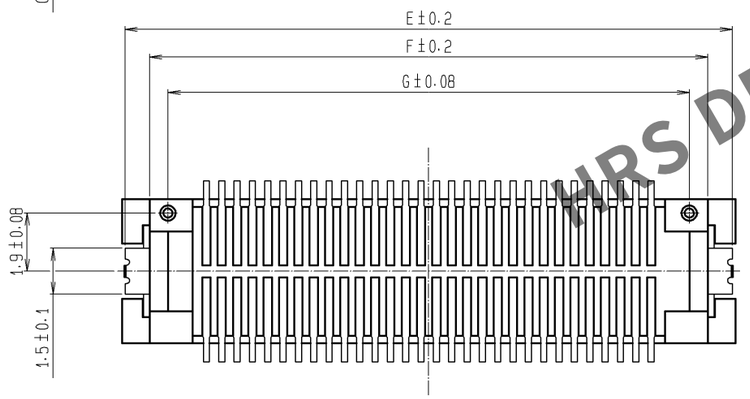

CODE NO.	CONTACT	A	B	C	D	E	F	G	H	J
CL683-0082-1-57	20	10	6.7	5.6	4.5	9.8	8.2	7	10.4	7.6
CL683-0083-4-57	30	12.5	9.2	8.1	7	12.3	10.7	9.5	12.9	10.1
CL683-0084-7-57	40	15	11.7	10.6	9.5	14.8	13.2	12	15.4	12.6
CL683-0085-0-57	50	17.5	14.2	13.1	12	17.3	15.7	14.5	17.9	15.1
CL683-0086-2-57	60	20	16.7	15.6	14.5	19.8	18.2	17	20.4	17.6
CL683-0087-5-57	70	22.5	19.2	18.1	17	22.3	20.7	19.5	22.9	20.1
CL683-0088-8-57	80	25	21.7	20.6	19.5	24.8	23.2	22	25.4	22.6

NOTES 1 : LEAD CO-PLANARITY INCLUDE REINFORCED METAL FITTINGS SHALL BE 0.1mm MAX.
2 IF THE RESIST PROCESSING HAS NOT MADE, IT HAS POSSIBILITY THAT THE TERMINAL TOUCHES WITH ▨ AREA.
PLEASE BE NOTED THIS POINT.

HRS DRAWING FOR REFERENCE

MATED

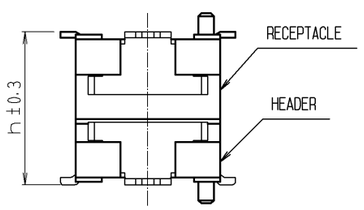

MATED HIGHT (h) (mm)

HEADER NO. \ RECEPTACLE NO.	DF17#(3.0)-*DS-0.5V(57)	DF17#(4.0)-*DS-0.5V(57)
DF17#(2.0)-*DP-0.5V(57)	5	6

NO.	MATERIAL	FINISH , REMARKS
2	POLYAMIDE (PA6T)	WHITE BEIGE , UL94V-0
1	PHOSPHER BRONZE	CONTACT AREA : GOLD PLATED 0.1μm min LEAD AREA : TIN PLATED 1μm min UNDER PLATING : NICKEL 1μm min

NO.	MATERIAL	FINISH , REMARKS
7	PS	CLEAR (REINFORCEMENT COLLAR)
6	PS	BLACK (PLASTIC REEL)
5	POLYESTER	CLEAR (COVER TAPE)
4	PS	CLEAR (EMBOSSED CARRIER TAPE)
3	PHOSPHER BRONZE	TIN PLATED 1μm min UNDER PLATING : NICKEL 1μm min

UNITS	SCALE	COUNT	DESCRIPTION OF REVISIONS	DESIGNED	CHECKED	DATE
mm	5 : 1					

HRS HIROSE ELECTRIC CO., LTD.

APPROVED	: KH. IKEDA	11.12.19
CHECKED	: TS. MIYAZAKI	11.12.19
DESIGNED	: YH. MICHIDA	11.12.17
DRAWN	: MS. SATO	11.12.17

DRAWING NO.	EDC3-162135-77
PART NO.	DF17(2.0)-*DP-0.5V(57)
CODE NO.	CL683

1/2

FORM HC0011-5-7

Sep.1.2024 Copyright 2024 HIROSE ELECTRIC CO., LTD. All Rights Reserved.
In case of consideration for using Automotive equipment / device which demand high reliability, kindly contact our sales window correspondents.

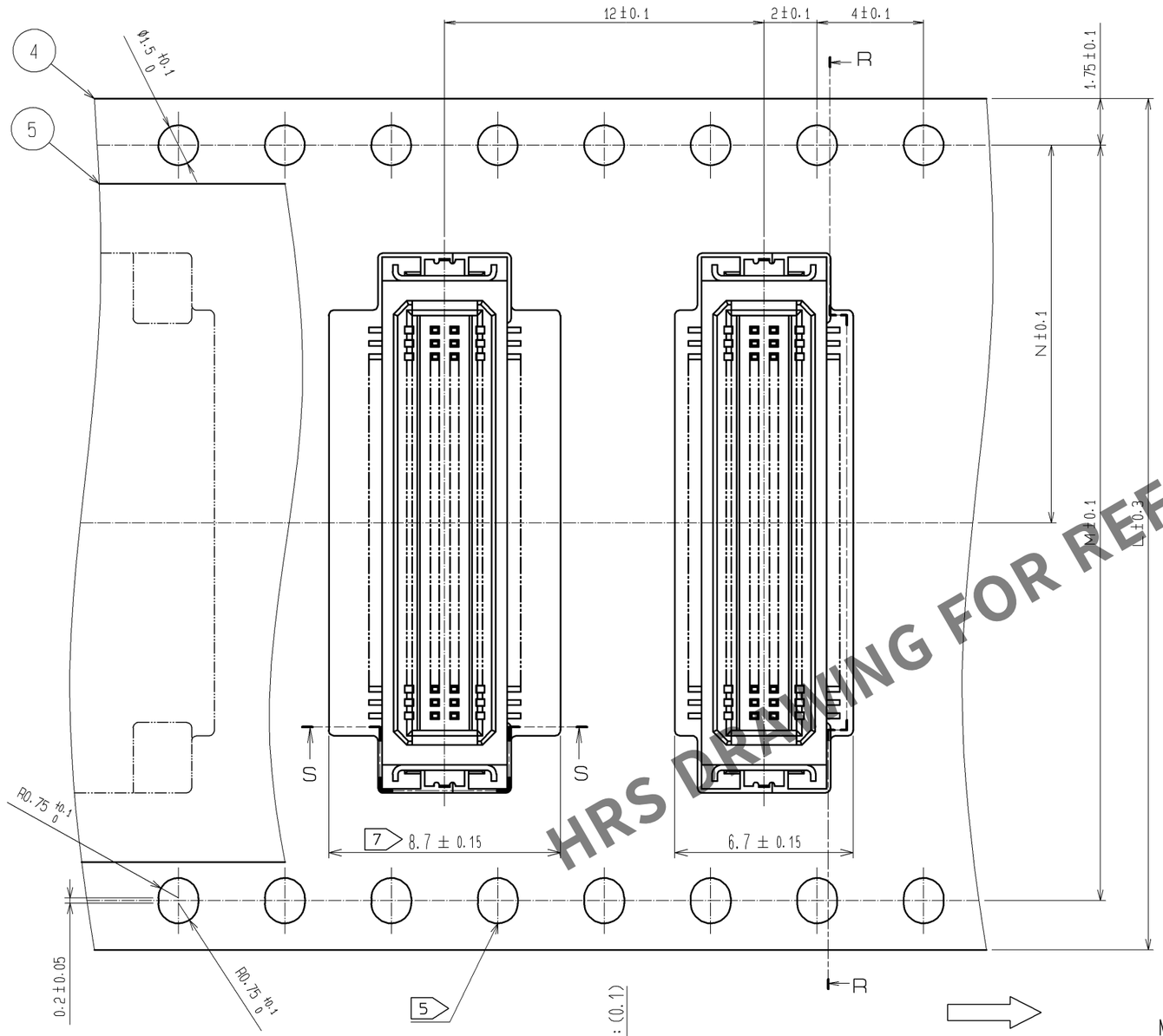

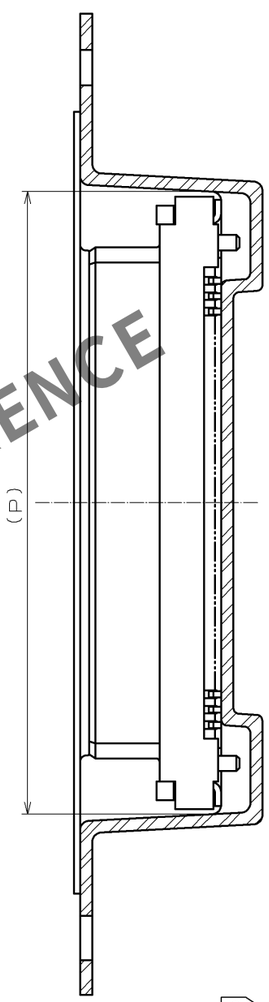

STYLE AND DIMENSION OF REEL (FREE)

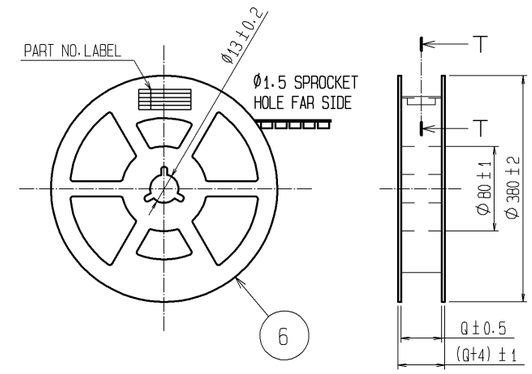

SUPPLIER
QUANTITY
PART No.
CODE No.
DATE OF MANUFACTURED

DETAIL OF PART No. LABEL

生産月日	年　月　日
図番	CL683−****−*−57
品名	DF17(2.0)−*DP−0.5V(57)
納入数量	1000Ko
納入者	ヒロセ電機(株)

T−T (FREE)

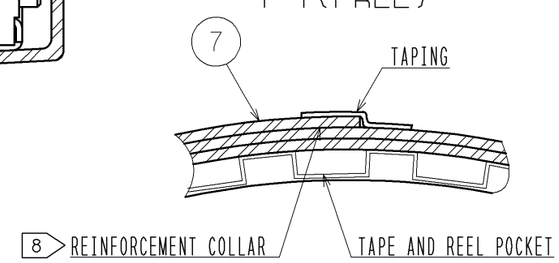

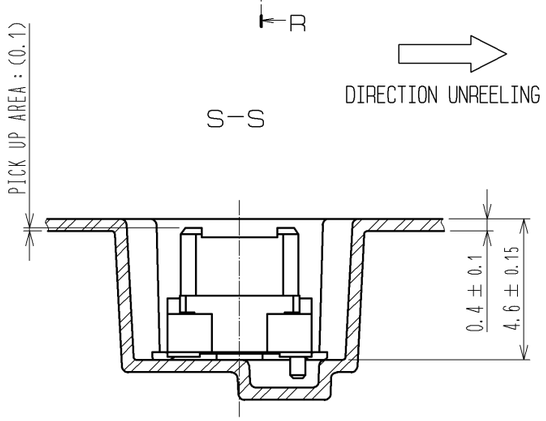

DIRECTION UNREELING

CODE NO.	CONTACT	L	M	N	P	Q
CL683-0082-1-57	20	24	−	11.5	10.3	25.5
CL683-0083-4-57	30	24	−	11.5	12.8	25.5
CL683-0084-7-57	40	24	−	11.5	15.3	25.5
CL683-0085-0-57	50	32	28.4	14.2	17.8	33.5
CL683-0086-2-57	60	32	28.4	14.2	20.3	33.5
CL683-0087-5-57	70	44	40.4	20.2	22.8	45.5
CL683-0088-8-57	80	44	40.4	20.2	25.3	45.5

NOTES 3 : 1REEL : 1000 CONNECTORS.
4 : AT THE BEGINNING OF THE REEL , 30 COMPONENTS SHALL BE EMPTY.
AT THE END OF THE REEL, 20 COMPONENTS SHALL BE EMPTY.
5 WHEN THE TAPE WIDTH IS 32mm or 44mm, SPROCKET HOLES SHALL BE SET ON BOTH SIDES OF REEL AS SHOWN ON THIS DRAWING.
6 : PEEL FORCE REFERS TO JIS C 0806.
7 ONE POCKET WIDTH IS BIGGER THAN OTHER IN CERTAIN DISTANCE.
8 AFTER PACKAGING, ROLL 2 METERS OF THE REINFORCEMENT COLLAR TO OUTER CIRCUMFERENCE OF TAPE AND REEL POCKET, AND TAPE DOWN AT THE END THE COLLAR.

HRS DRAWING FOR REFERENCE

HRS	DRAWING NO.	EDC3-162135-77
	PART NO.	DF17(2.0)-*DP-0.5V(57)
	CODE NO.	CL683 △ 2/2